HT6873 Mode	CTRL Voltage
ACF-Off(Normal)	2V~VDD
ACF-1	1.55~1.85V
ACF-2	1.1~1.4V
Shutdown	VSS~0.3V
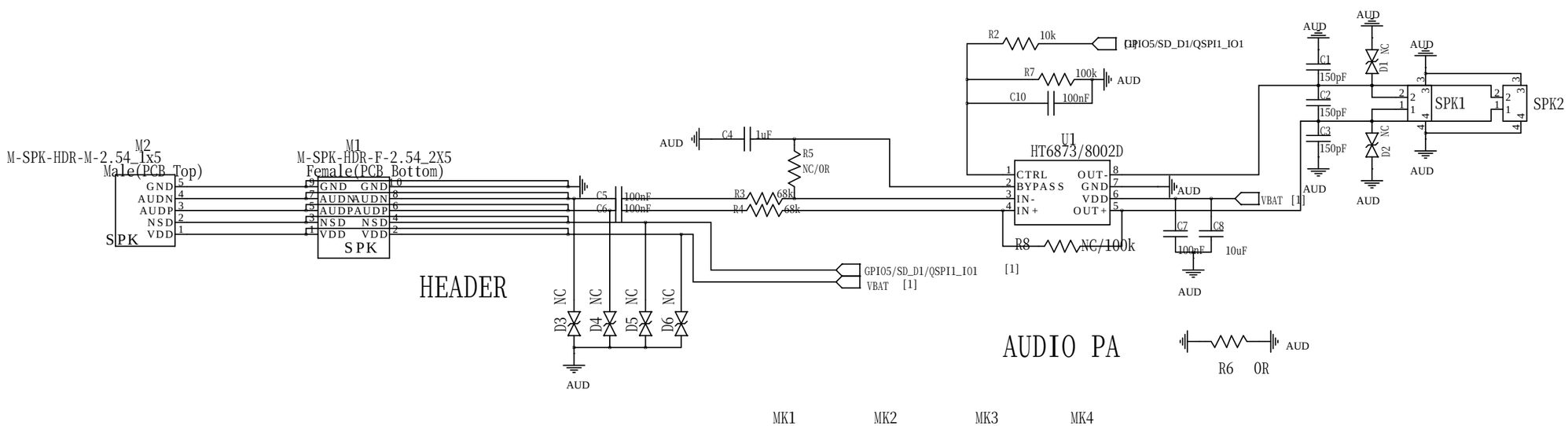
Av:_HT6873:220/Rin_8002D:Rf/Rin