REVISION RECORD			
LTR	ECO NO.:	APPROVED:	DATE:

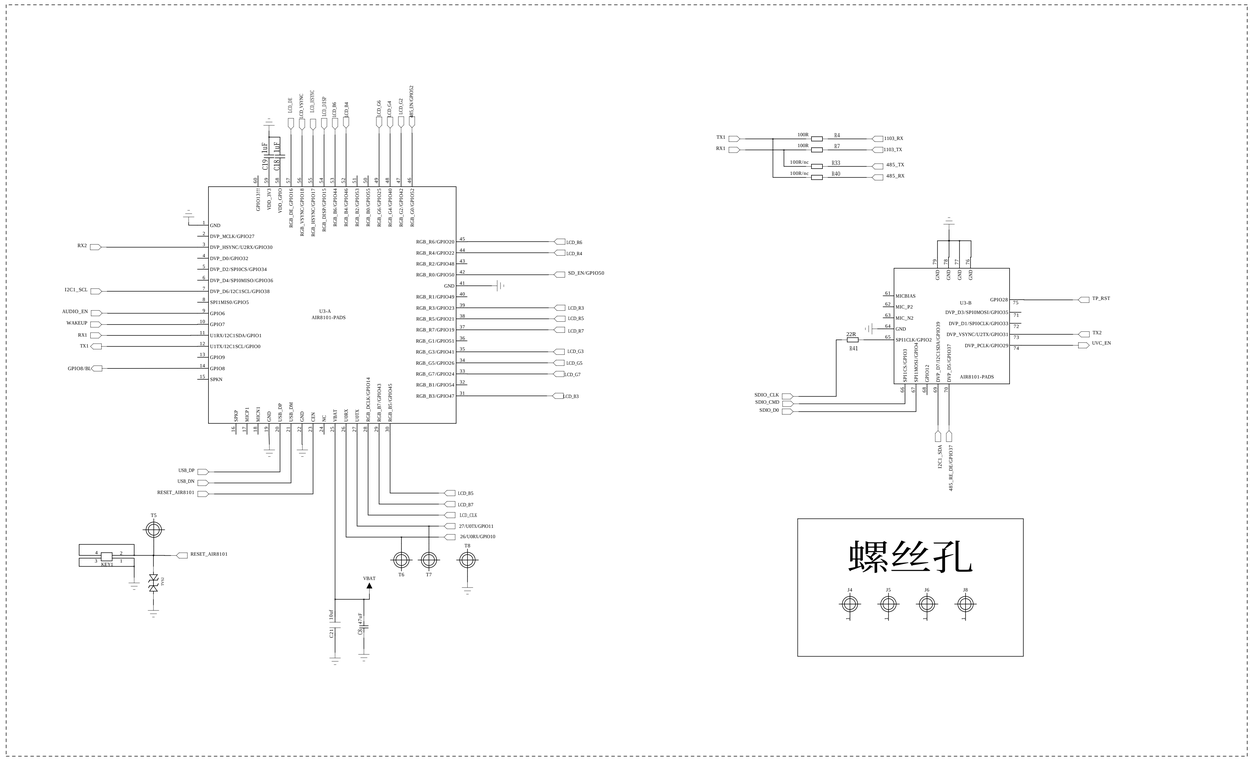

DRAWN: <Drawn By>	DATED: <Drawn Date>	COMPANY: <Company Name>			
CHECKED: <Checked By>	DATED: <Checked Date>	TITLE: <Title>			
QUALITY CONTROL: <QC By>	DATED: <QC Date>	CODE: <Code>	SIZE: A0	DRAWING NO: <Drawing Number>	REV: <Revision>
RELEASED: <Released By>	DATED: <Release Date>	SCALE: <Scale>		SHEET: 1 OF 7	

REVISION RECORD			
LTR	ECO NO.:	APPROVED:	DATE:

数字电源3.3V

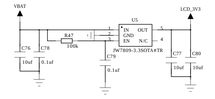

背光控制

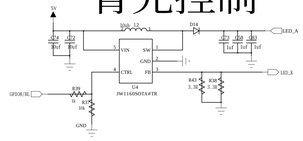

偏置电源

本示例仅在50PIN LCD类型时使用,7寸 9寸 10.1寸等大尺寸LCD常用

VGH:18.5V
VGL:-8.2v
AVDD:9.6V
VCOM:4.2V

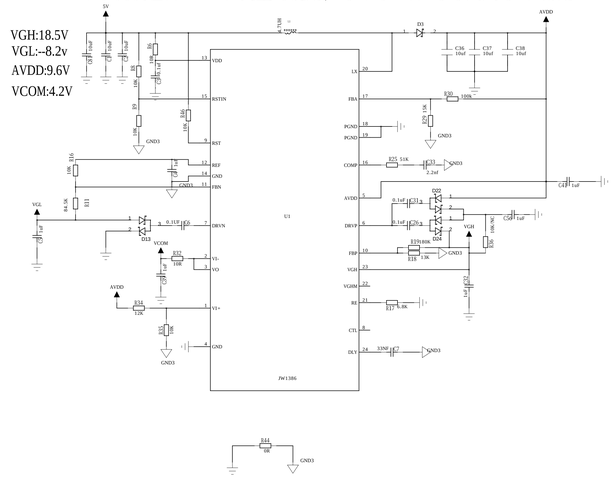

Air1603全系仅支持RGB565

当前已适配最高分辨率1200*600，理论可支持到1280*800

50PIN LCD
常用于7寸 9寸 10.1寸等大尺寸LCD

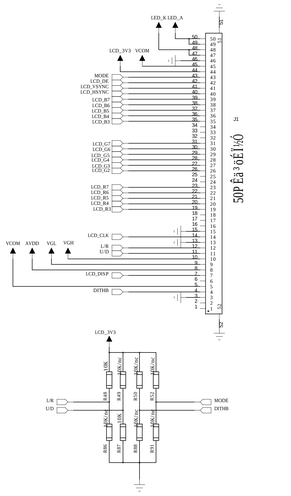

40PIN LCD
常用于5寸 7寸 9寸等小尺寸LCD

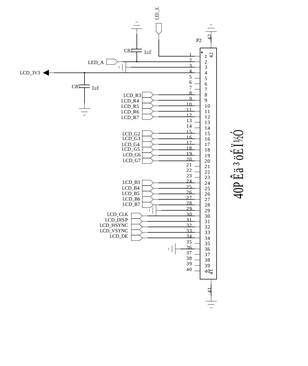

电容触摸

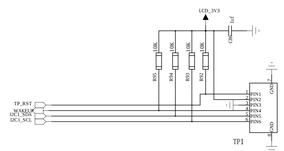

DRAWN: <Drawn By>	DATED: <Drawn Date>	COMPANY: <Company Name>			
CHECKED: <Checked By>	DATED: <Checked Date>	TITLE: <Title>			
QUALITY CONTROL: <QC By>	DATED: <QC Date>	CODE: <Code>	SIZE: A0	DRAWING NO: <Drawing Number>	REV: <Revision>
RELEASED: <Released By>	DATED: <Release Date>	SCALE: <Scale>	SHEET: 2 OF 7		

REVISION RECORD			
LTR	ECO NO.:	APPROVED:	DATE:

UVC供电 5.5V

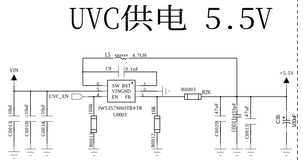

VOUT=0.6*(1+R0202/R0203)=5.5v

Type-A USB母头

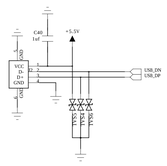

UART串口端子

人脸识别摄像头需搭配一路UART通信

人脸识别摄像头:AirCamera_1034

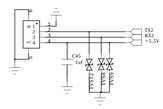

DRAWN: <Drawn By>	DATED: <Drawn Date>	COMPANY: <Company Name>			
CHECKED: <Checked By>	DATED: <Checked Date>	TITLE: <Title>			
QUALITY CONTROL: <QC By>	DATED: <QC Date>	CODE: <Code>	SIZE: A0	DRAWING NO: <Drawing Number>	REV: <Revision>
RELEASED: <Released By>	DATED: <Release Date>	SCALE: <Scale>		SHEET: 3 OF 7	

REVISION RECORD			
LTR	ECO NO.:	APPROVED:	DATE:

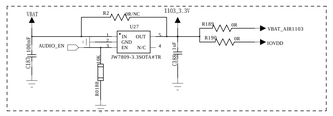

Air1103Ð¾Æ¬

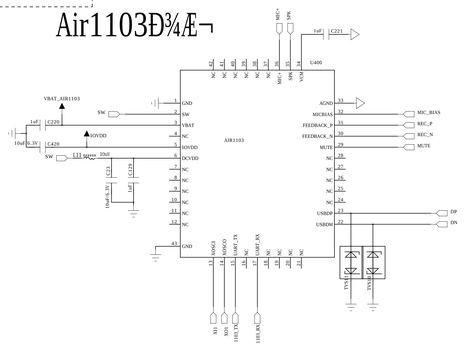

Air1103È¡¼þÏÂÔØ

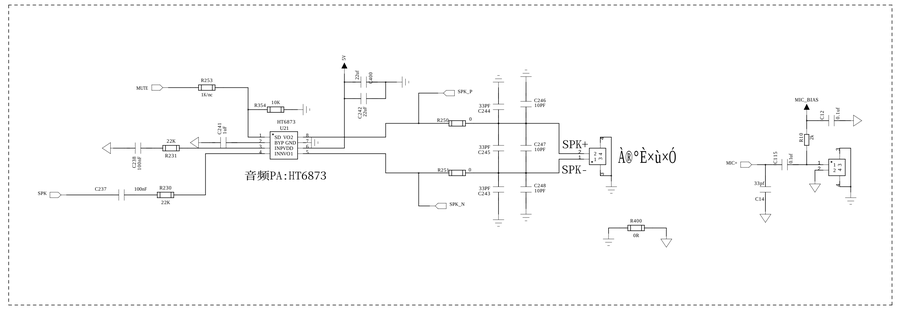

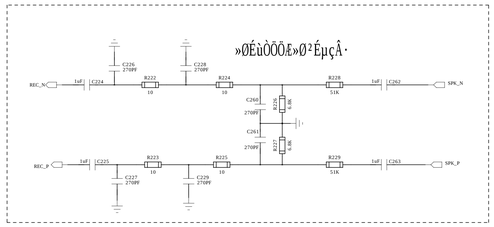

DRAWN: <Drawn By>	DATED: <Drawn Date>	COMPANY: <Company Name>	
CHECKED: <Checked By>	DATED: <Checked Date>	TITLE: <Title>	
QUALITY CONTROL: <QC By>	DATED: <QC Date>	CODE: <Code>	SIZE: A0
RELEASED: <Released By>	DATED: <Release Date>	DRAWING NO: <Drawing Number>	REV: <Revision>
		SCALE: <Scale>	SHEET: 4 OF 7

REVISION RECORD			
LTR	ECO NO.:	APPROVED:	DATE:

SPI接口SD卡

REVISION RECORD			
LTR	ECO NO.:	APPROVED:	DATE:

UART TO 485

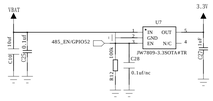

485收发器

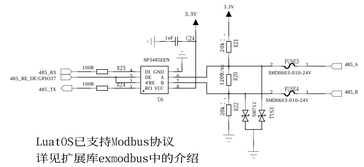

LuatOS已支持Modbus协议
详见扩展库exmodbus中的介绍

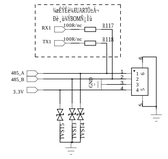

DRAWN: <Drawn By>	DATED: <Drawn Date>	COMPANY: <Company Name>	
CHECKED: <Checked By>	DATED: <Checked Date>	TITLE: <Title>	
QUALITY CONTROL: <QC By>	DATED: <QC Date>	CODE: <Code>	SIZE: A0 DRAWING NO: <Drawing Number> REV: <Revision>
RELEASED: <Released By>	DATED: <Release Date>	SCALE: <Scale>	SHEET: 6 OF 7

REVISION RECORD			
LTR	ECO NO.:	APPROVED:	DATE:

LCD偏置/背光/数字电源+音频PA

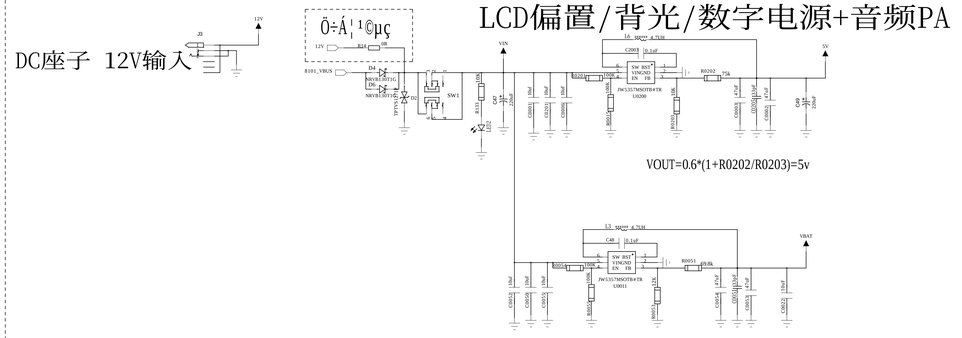

USB to UART 下载电路

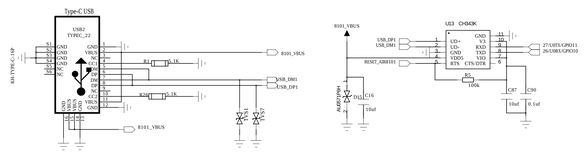

DRAWN: <Drawn By>	DATED: <Drawn Date>	COMPANY: <Company Name>	
CHECKED: <Checked By>	DATED: <Checked Date>	TITLE: <Title>	
QUALITY CONTROL: <QC By>	DATED: <QC Date>	CODE: <Code>	SIZE: A0
RELEASED: <Released By>	DATED: <Release Date>	DRAWING NO: <Drawing Number>	REV: <Revision>
		SCALE: <Scale>	SHEET: 7 OF 7