Air700ECP/Air700ECH

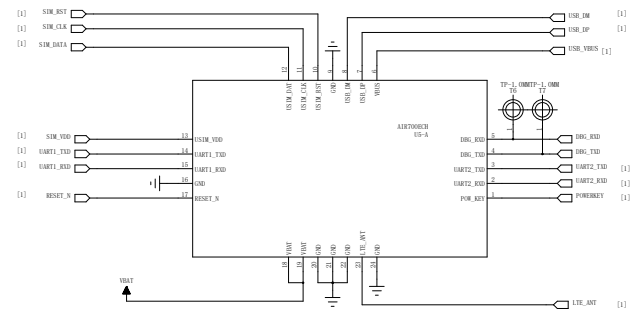

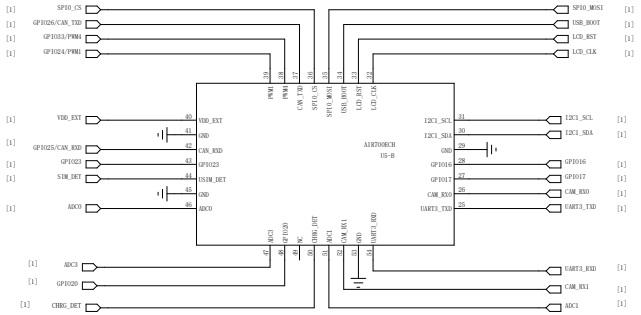

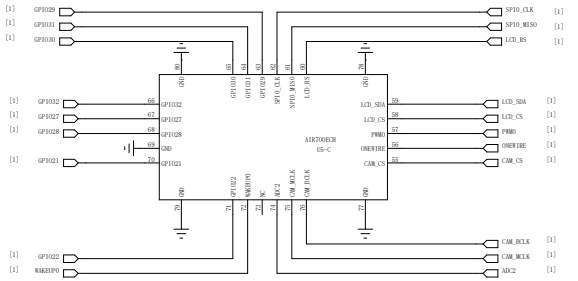

LDO,3.3V输出

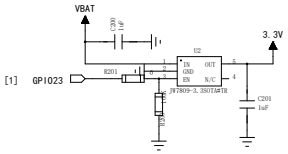

IPEX_ANT

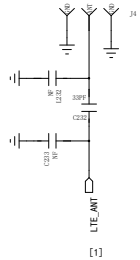

SIM卡座0

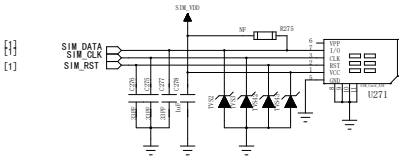

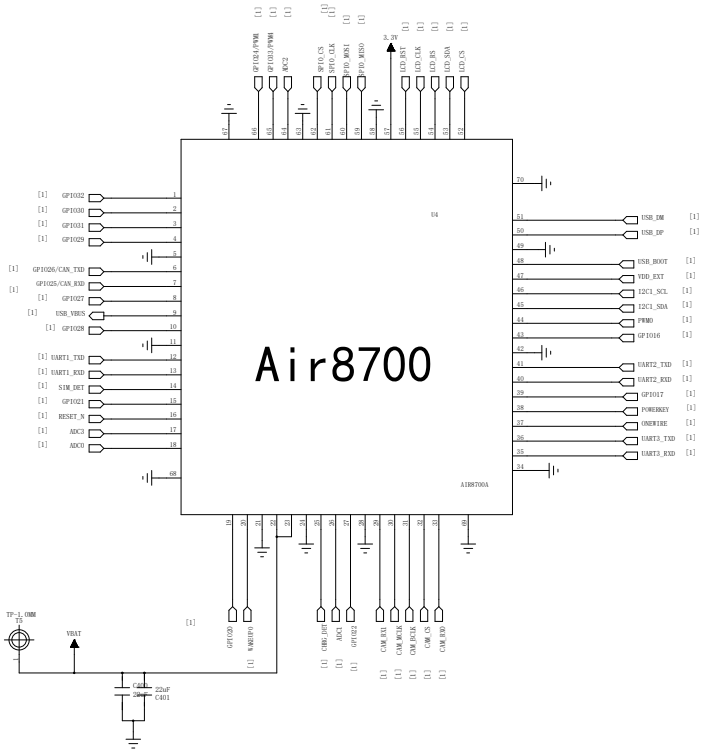

下载调试

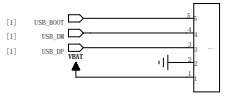

Designer	<OrgName>	Release	<OrgAddr1>
DRAWING TITLE	Air8700工业模组		
SIZE A1	DOC NO.		Rev <Rev>
	PCB NO. <OrgAddr2>	LAST UPDATE Friday, Oct 8, 2021	
	Confidential	Sheet 1 of 1	